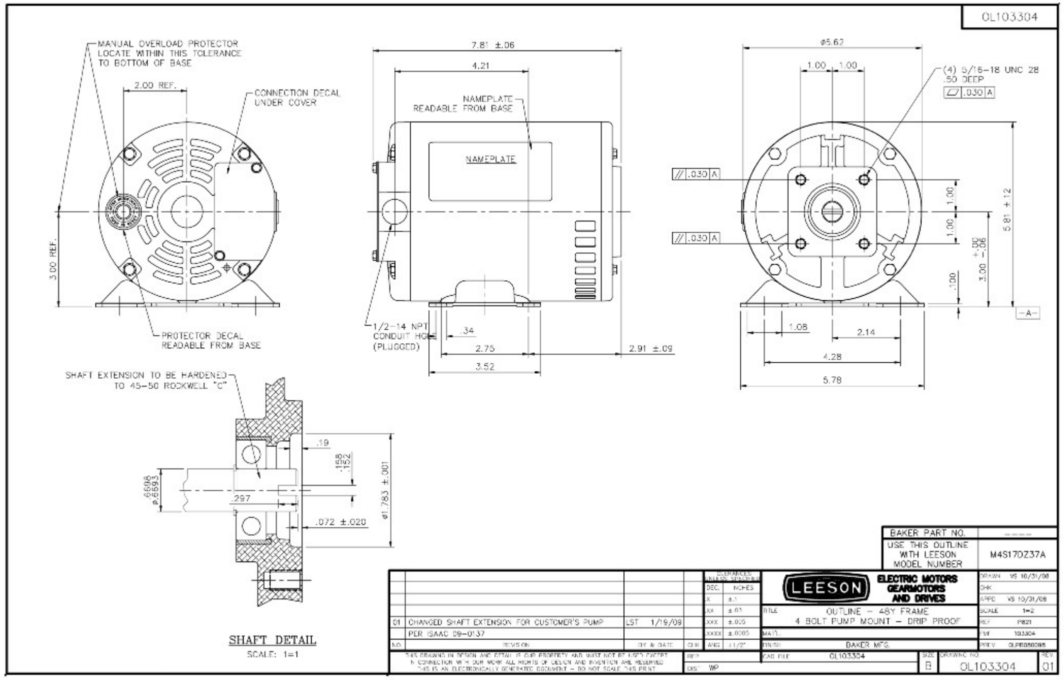

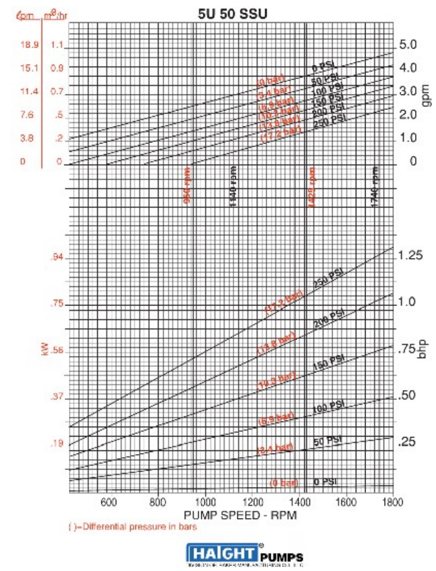

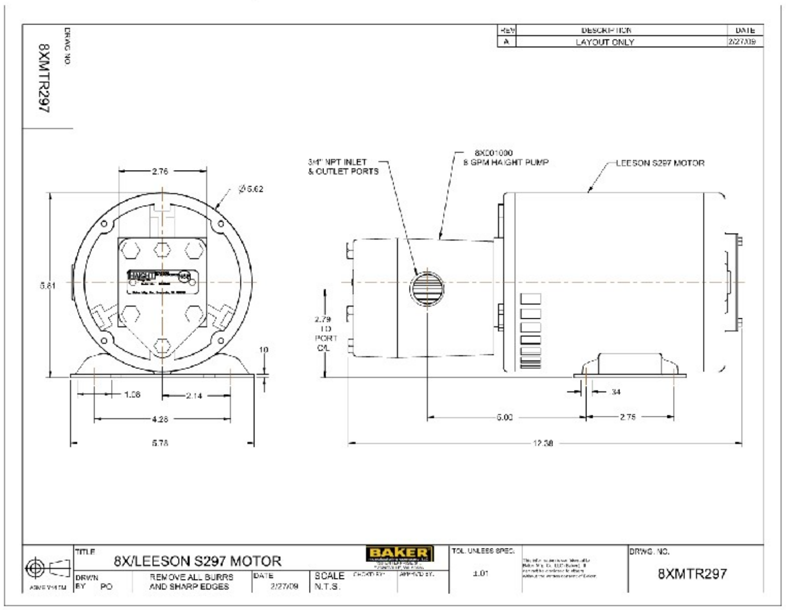

5 GPM EXTERNAL GEAR PUMP
5X001000

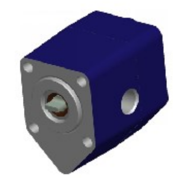

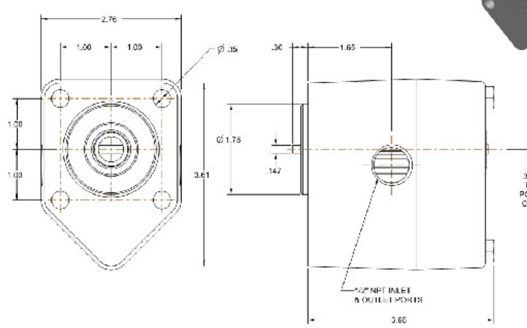

Oil Solutions Group — The Cooking Oil Specialists — EZ3D			UNLESS OTHERWISE SPECIFIED:		NAME	DATE
			DIMENSIONS ARE IN INCHES TOLERANCES: FRACTIONAL± ANGULAR: MACH± BEND ± TWO PLACE DECIMAL ± THREE PLACE DECIMAL ±	DRAWN		
				CHECKED		
				ENG APPR.		
				MFG APPR.		
			INTERPRET GEOMETRIC TOLERANCING PER:	Q.A.		
			MATERIAL STAINLESS STEEL	COMMENTS:		
	VERSION	DATE	FINISH			
	REVISION		DO NOT SCALE DRAWING			

PROPRIETARY AND CONFIDENTIAL
THE INFORMATION CONTAINED IN THIS DRAWING IS THE SOLE PROPERTY OF OIL SOLUTIONS GROUP. ANY REPRODUCTION IN PART OR AS A WHOLE WITHOUT THE WRITTEN PERMISSION OF OIL SOLUTIONS GROUP IS PROHIBITED.

TITLE:
ANNEX CUT SHEETS
PUMP BOX

SIZE	DWG. NO.	REV
D	100-07	

SCALE: 1:1 WEIGHT: SHEET 8 OF 8